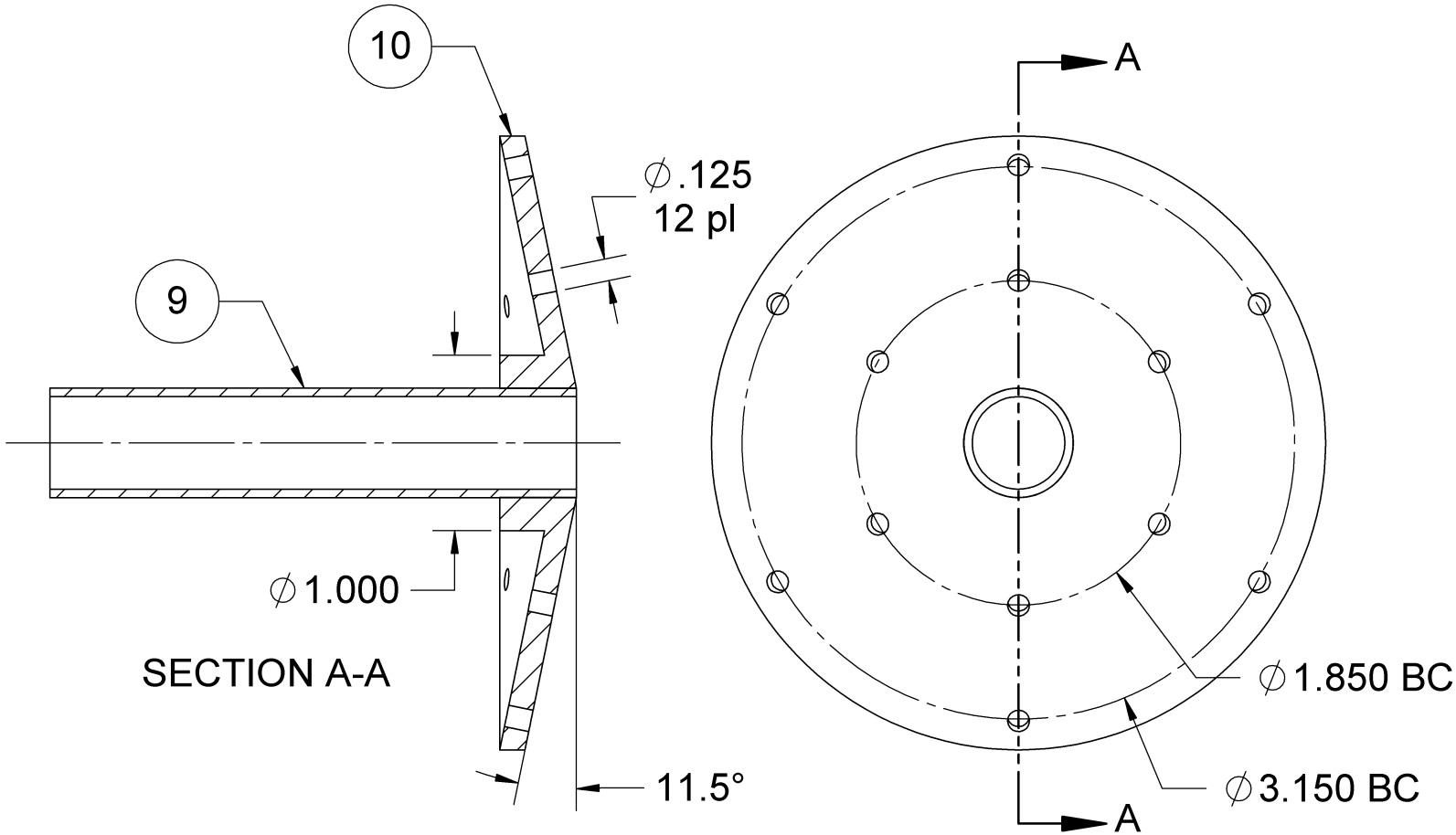

Pole Hub Disk
Step 2
Figure 4