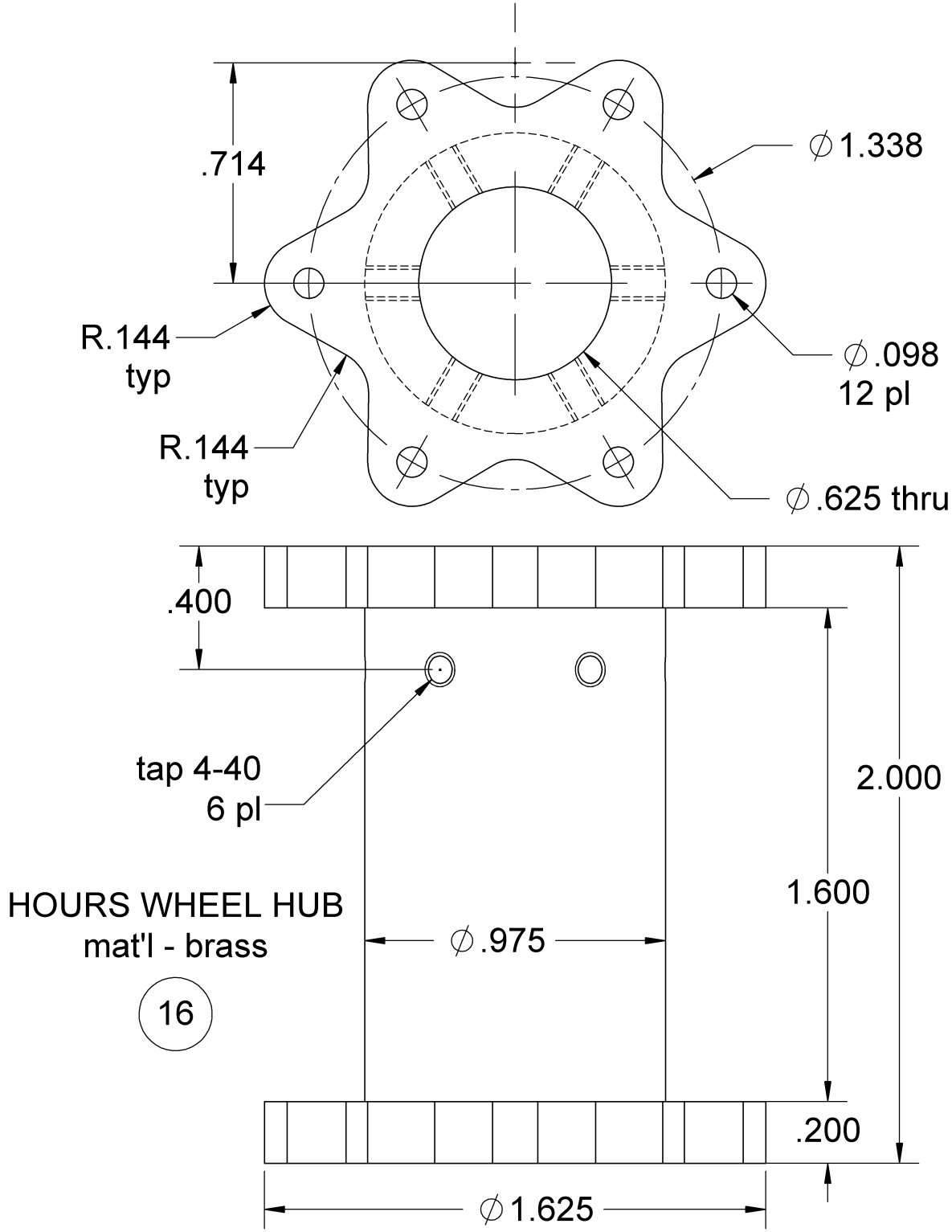

HOURS WHEEL HUB
mat'l - brass

16